Badge(r) Badge(r): The Story of DC2024 Conference Badge

Igor Brkić

/me

- https://hyperglitch.com
- hardware & software engineer
- does this↗ also for fun

#badgelife

/features

- e-paper display
- some flashing LEDs
- IR transmitter/receiver
- light sensor – for configuration
- touch button

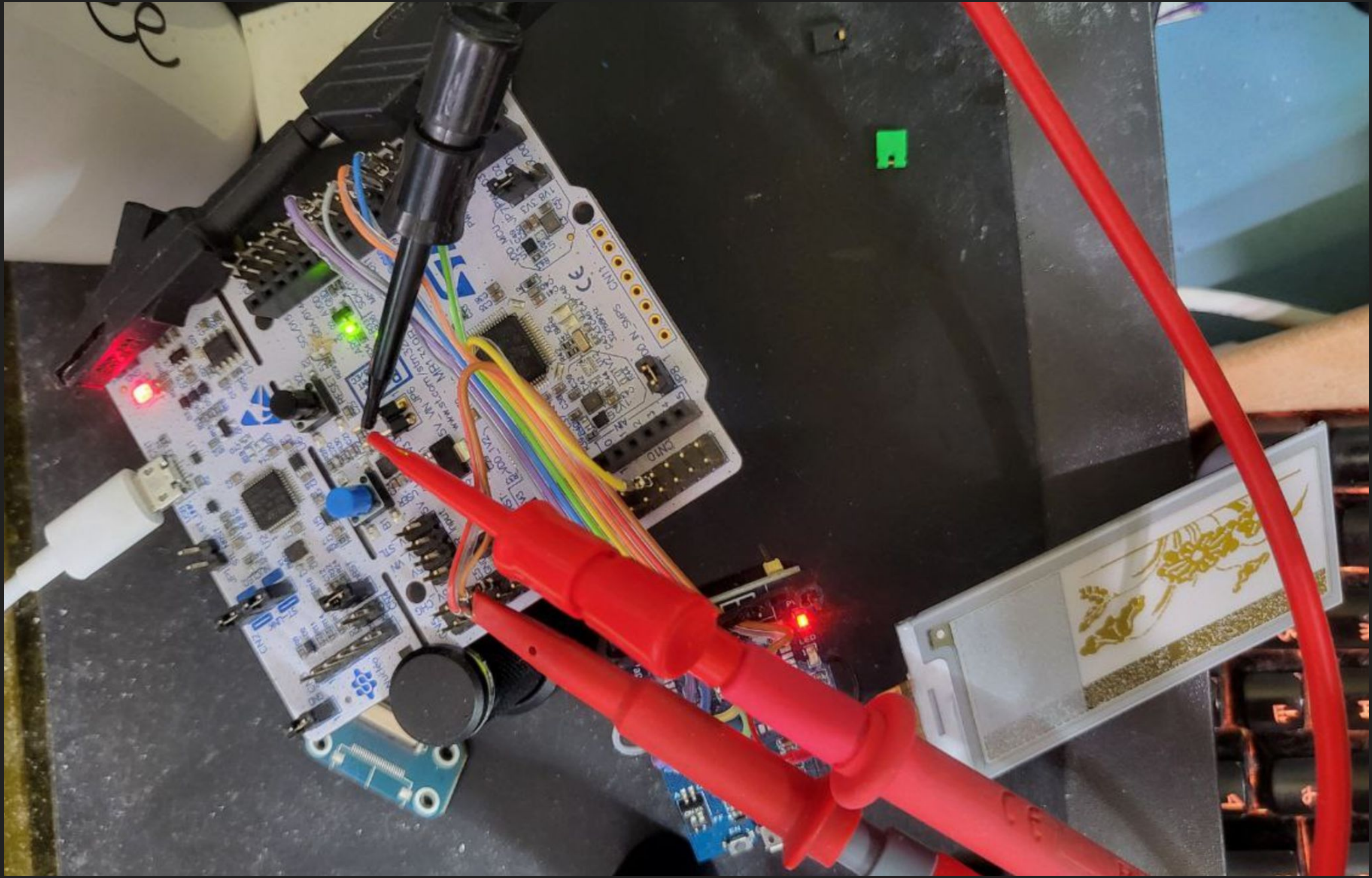

ATTENDEE
27 OPEN SYSTEMS DAYS
CROATIAN LINUX USERS' CONFE
LUCIJANA DUJIĆ RASTIĆ
Studio Utopia
DC TEAM
JellyfishOPP output
rev 0.1
2023/10/28

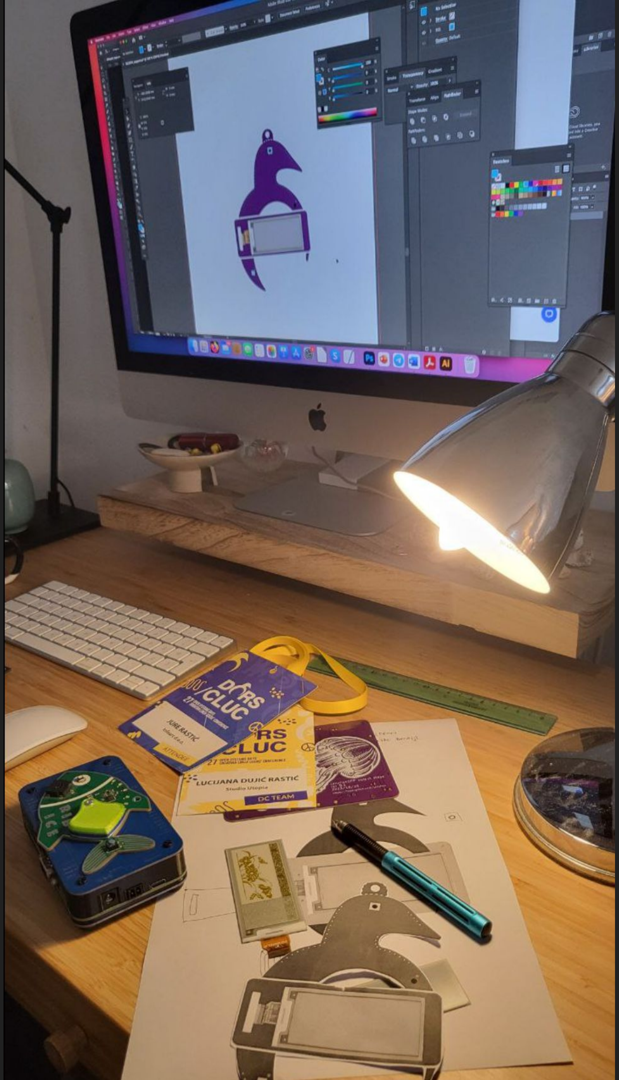
DORS/CLUC
27
JURE RASTIĆ
ATTENDEE
DORS/CLUC
27 OPEN SYSTEMS DAYS
CROATIAN LINUX USERS' CONFERENCE
LUCIJANA DUJIĆ RASTIĆ
Studio Utopia
DC TEAM

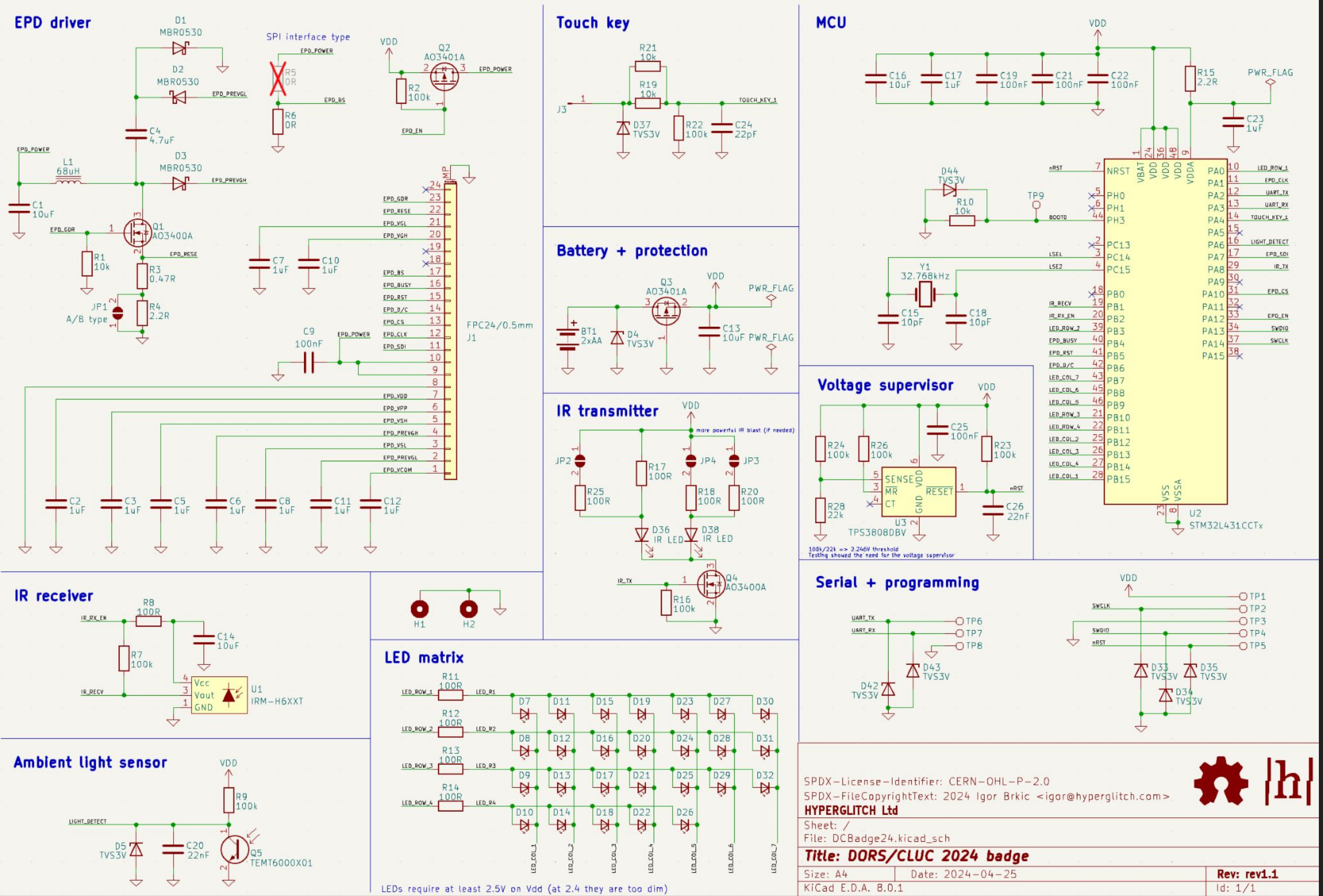
EPD driver
SPI interface type
Touch key
MCU
Battery + protection
IR transmitter
Voltage supervisor
IR receiver
Serial + programming
LED matrix
Ambient light sensor
D1 MBR0530
D2 MBR0530
D3 MBR0530
C4 4.7uF
L1 68uH
C1 10uF
Q1 AO3400A
R1 10k
R3 0.47R
R4 2.2R
JP1 A/B type
R5 0R
R6 0R
Q2 AO3401A
R2 100k
C7 1uF
C10 1uF
C9 100nF
FPC24/0.5mm
J1
C2 1uF
C3 1uF
C5 1uF
C6 1uF
C8 1uF
C11 1uF
C12 1uF
EPD_POWER
EPD_PREVGL
EPD_PREVGH
EPD_GDR
EPD_RESE
EPD_EN
EPD_BS
EPD_VGL
EPD_VGH
EPD_BUSY
EPD_RST
EPD_D/C
EPD_CS
EPD_CLK
EPD_SDI
EPD_VDD
EPD_VPP
EPD_VSH
EPD_VSL
EPD_VCOM
VDD
J3
R21 10k
R19 10k
D37 TVS3V
R22 100k
C24 22pF
TOUCH_KEY_1
C16 10uF
C17 1uF
C19 100nF
C21 100nF
C22 100nF
R15 2.2R
PWR_FLAG
C23 1uF
D44 TVS3V
R10 10k
TP9
BOOT0
nRST
LSE1
LSE2
Y1 32.768kHz
C15 10pF
C18 10pF
U2
STM32L431CCTx
NRST
PH0
PH1
PH3
PC13
PC14
PC15
PB0
PB1
PB2
PB3
PB4
PB5
PB6
PB7
PB8
PB9
PB10
PB11
PB12
PB13
PB14
PB15
VBAT
VDDA
VSS
VSSA
PA0
PA1
PA2
PA3
PA4
PA5
PA6
PA7
PA8
PA9
PA10
PA11
PA12
PA13
PA14
PA15
LED_ROW_1
EPD_CLK
UART_TX
UART_RX
TOUCH_KEY_1
LIGHT_DETECT
EPD_SDI
IR_TX
EPD_CS
EPD_EN
SWDIO
SWCLK
IR_RECV
IR_RX_EN
LED_ROW_2
LED_COL_7
LED_COL_6
LED_COL_5
LED_ROW_3
LED_ROW_4
LED_COL_2
LED_COL_3
LED_COL_4
LED_COL_1
BT1 2xAA
D4 TVS3V
Q3 AO3401A
C13 10uF
JP2
JP3
JP4
R25 100R
R17 100R
R18 100R
R20 100R
D36 IR LED
D38 IR LED
Q4 AO3400A
R16 100k
R24 100k
R26 100k
R28 22k
C25 100nF
R23 100k
C26 22nF
U3 TPS3808DBV
SENSE
MR
CT
RESET
GND
R8 100R
R7 100k
C14 10uF
U1 IRM-H6XXT
Vcc
Vout
H1
H2
TP1
TP2
TP3
TP4
TP5
TP6
TP7
TP8
D42 TVS3V
D43 TVS3V
D33 TVS3V
D34 TVS3V
D35 TVS3V
R11 100R
R12 100R
R13 100R
R14 100R
LED_R1
LED_R2
LED_R3
LED_R4
D7
D8
D9
D10
D11
D12
D13
D14
D15
D16
D17
D18
D19
D20
D21
D22
D23
D24
D25
D26
D27
D28
D29
D30
D31
D32
R9 100k
D5 TVS3V
C20 22nF
Q5 TEMT6000X01

more powerful IR blast (if needed)

100k/22k => 2.246V threshold
Testing showed the need for the voltage supervisor

LEDs require at least 2.5V on Vdd (at 2.4 they are too dim)

SPDX-License-Identifier: CERN-OHL-P-2.0

SPDX-FileCopyrightText: 2024 Igor Brkic <igor@hyperglitch.com>

HYPERGLITCH Ltd

Sheet: /
File: DCBadge24.kicad_sch

Title: DORS/CLUC 2024 badge

Size: A4
Date: 2024-04-25
Rev: rev1.1
KiCad E.D.A. 8.0.1
Id: 1/1

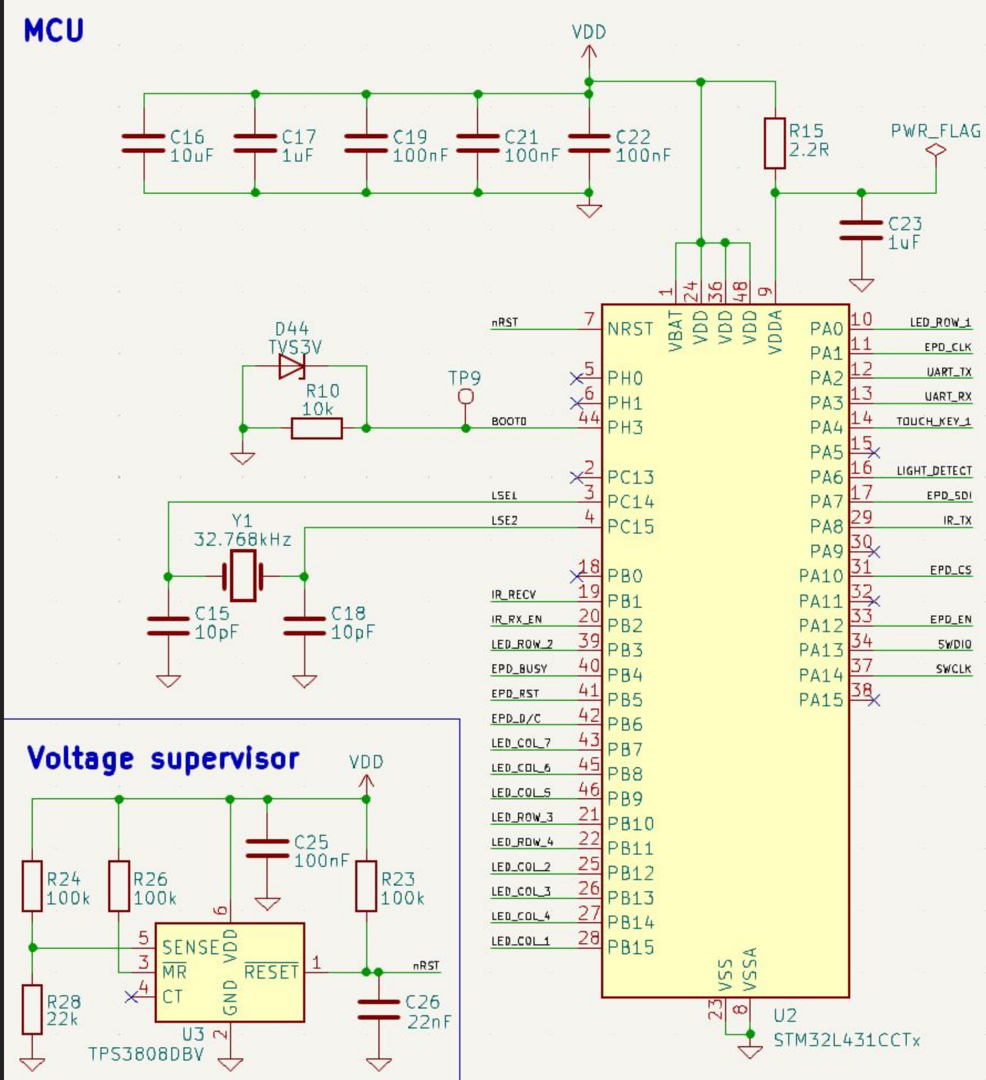MCU
VDD
C16
10uF
C17
1uF
C19
100nF
C21
100nF
C22
100nF
R15
2.2R
PWR_FLAG
C23
1uF
D44
TVS3V
R10
10k
TP9
nRST
BOOT0
LSE1
LSE2
Y1
32.768kHz
C15
10pF
C18
10pF
1 24 36 48 9
VBAT VDD VDD VDD VDDA
7 NRST
5 PH0
6 PH1
44 PH3
2 PC13
3 PC14
4 PC15
18 PB0
19 PB1
20 PB2
39 PB3
40 PB4
41 PB5
42 PB6
43 PB7
45 PB8
46 PB9
21 PB10
22 PB11
25 PB12
26 PB13
27 PB14
28 PB15
IR_RECV
IR_RX_EN
LED_ROW_2
EPD_BUSY
EPD_RST
EPD_D/C
LED_COL_7
LED_COL_6
LED_COL_5
LED_ROW_3
LED_ROW_4
LED_COL_2
LED_COL_3
LED_COL_4
LED_COL_1
PA0 10 LED_ROW_1
PA1 11 EPD_CLK
PA2 12 UART_TX
PA3 13 UART_RX
PA4 14 TOUCH_KEY_1
PA5 15
PA6 16 LIGHT_DETECT
PA7 17 EPD_SDI
PA8 29 IR_TX
PA9 30
PA10 31 EPD_CS
PA11 32
PA12 33 EPD_EN
PA13 34 SWDIO
PA14 37 SWCLK
PA15 38
VSS VSSA
23 8
U2
STM32L431CCTx
Voltage supervisor
VDD
R24
100k
R26
100k
C25
100nF
R23
100k
6
5 SENSE
3 MR
4 CT
VDD
GND
RESET 1
2
nRST
R28
22k
C26
22nF
U3
TPS3808DBV

EPD driver

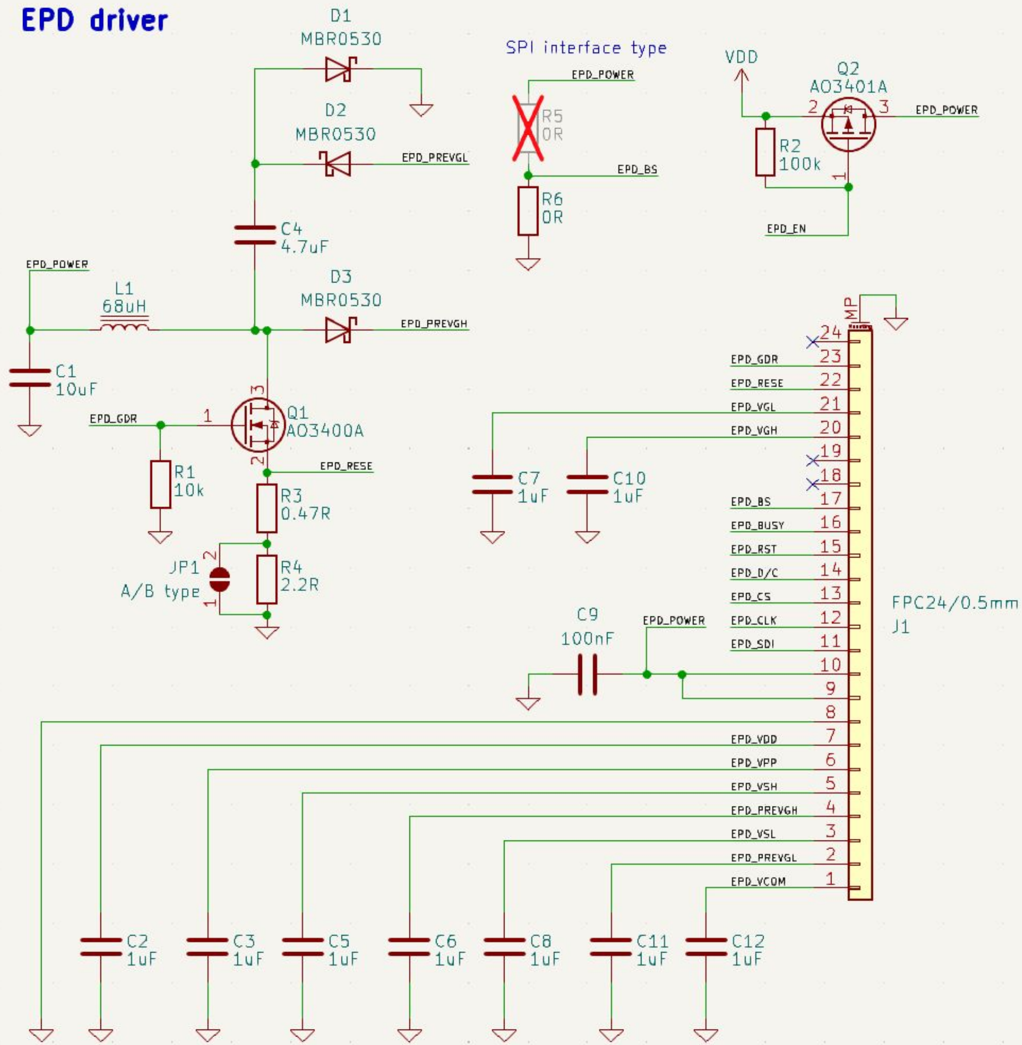
D1
MBR0530
D2
MBR0530
EPD_PREVGL
C4
4.7uF
EPD_POWER
L1
68uH
D3
MBR0530
EPD_PREVGH
C1
10uF
EPD_GDR
1
3
2
Q1
AO3400A
EPD_RESE
R1
10k
R3
0.47R
JP1
A/B type
2
1
R4
2.2R
SPI interface type
EPD_POWER
R5
0R
EPD_BS
R6
0R
VDD
Q2
AO3401A
2
3
EPD_POWER
R2
100k
1
EPD_EN
MP
24
EPD_GDR
23
EPD_RESE
22
EPD_VGL
21
EPD_VGH
20
19
18
C7
1uF
C10
1uF
EPD_BS
17
EPD_BUSY
16
EPD_RST
15
EPD_D/C
14
EPD_CS
13
EPD_CLK
12
EPD_SDI
11
C9
100nF
EPD_POWER
10
9
8
EPD_VDD
7
EPD_VPP
6
EPD_VSH
5
EPD_PREVGH
4
EPD_VSL
3
EPD_PREVGL
2
EPD_VCOM
1
FPC24/0.5mm
J1
C2
1uF
C3
1uF
C5
1uF
C6
1uF
C8
1uF
C11
1uF
C12
1uF

LED matrix

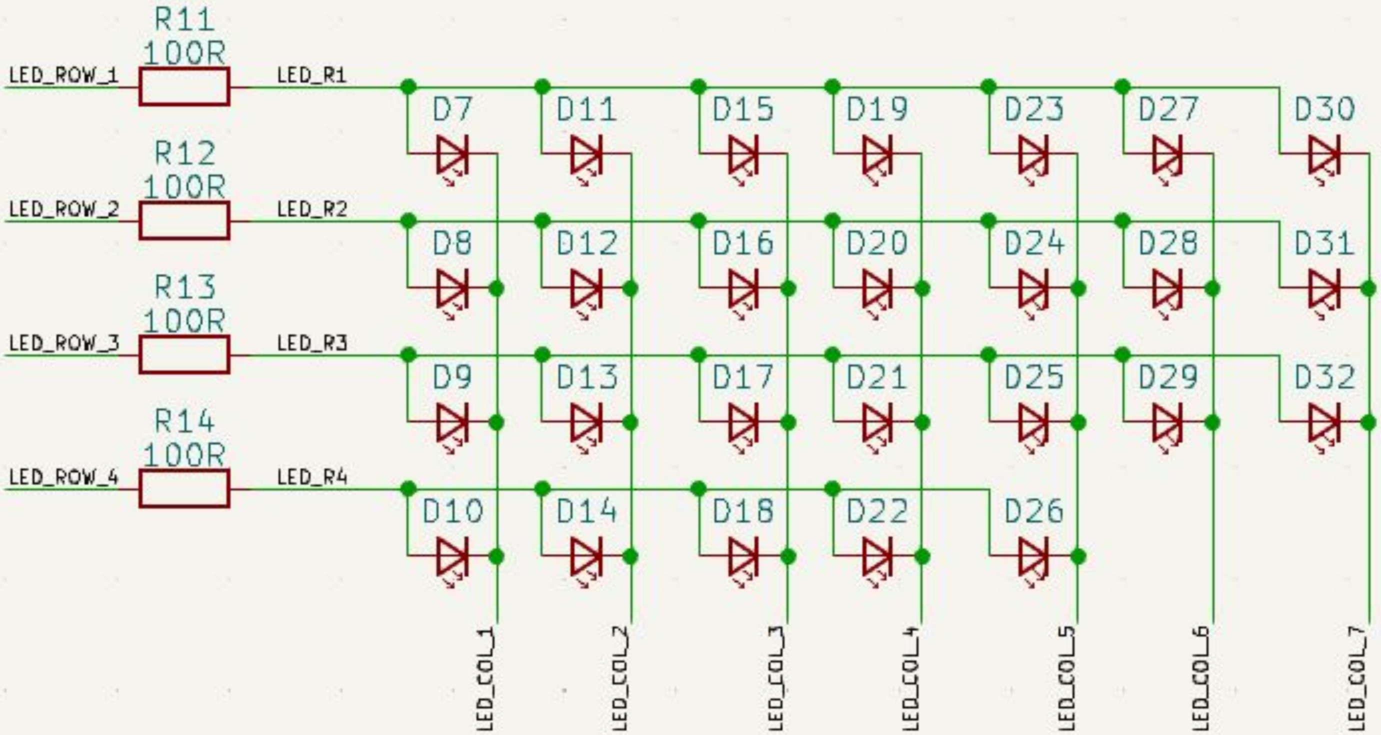
R11
100R
LED_ROW_1
LED_R1
R12
100R
LED_ROW_2
LED_R2
R13
100R
LED_ROW_3
LED_R3
R14
100R
LED_ROW_4
LED_R4
D7
D11
D15
D19
D23
D27
D30
D8
D12
D16
D20
D24
D28
D31
D9
D13
D17
D21
D25
D29
D32
D10
D14
D18
D22
D26
LED_COL_1
LED_COL_2
LED_COL_3
LED_COL_4
LED_COL_5
LED_COL_6
LED_COL_7

IR receiver

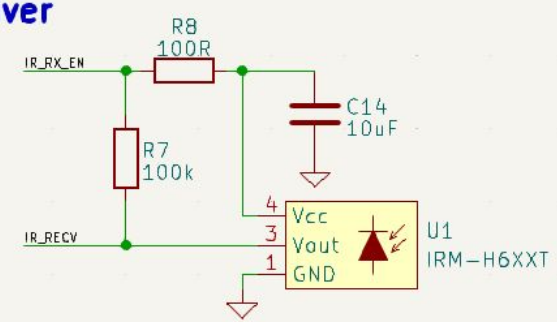
R8
100R
IR_RX_EN
C14
10uF
R7
100k
IR_RECV
4
Vcc
3
Vout
1
GND
U1
IRM-H6XXT

Ambient light sensor

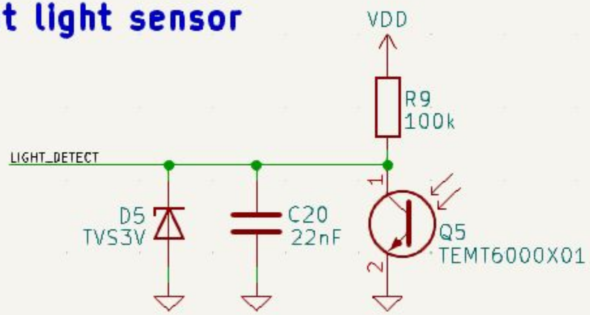
VDD
R9
100k
LIGHT_DETECT
1
D5
TVS3V
C20
22nF
Q5
TEMT6000X01
2

IR transmitter

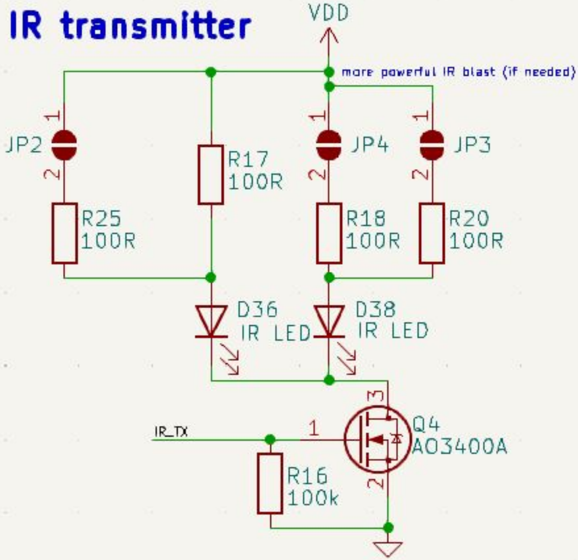
VDD
more powerful IR blast (if needed)
1
JP2
2
R25
100R
R17
100R
1
JP4
2
R18
100R
1
JP3
2
R20
100R
D36
IR LED
D38
IR LED
3
Q4
AO3400A
IR_TX
1
R16
100k
2

Touch key

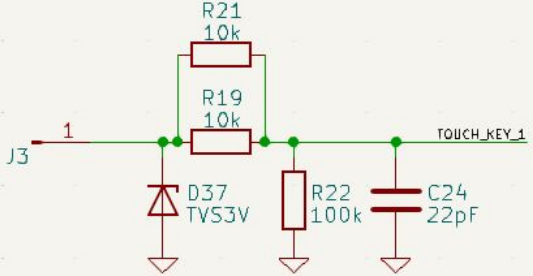
R21
10k
R19
10k
1
J3
TOUCH_KEY_1
D37
TVS3V
R22
100k
C24
22pF

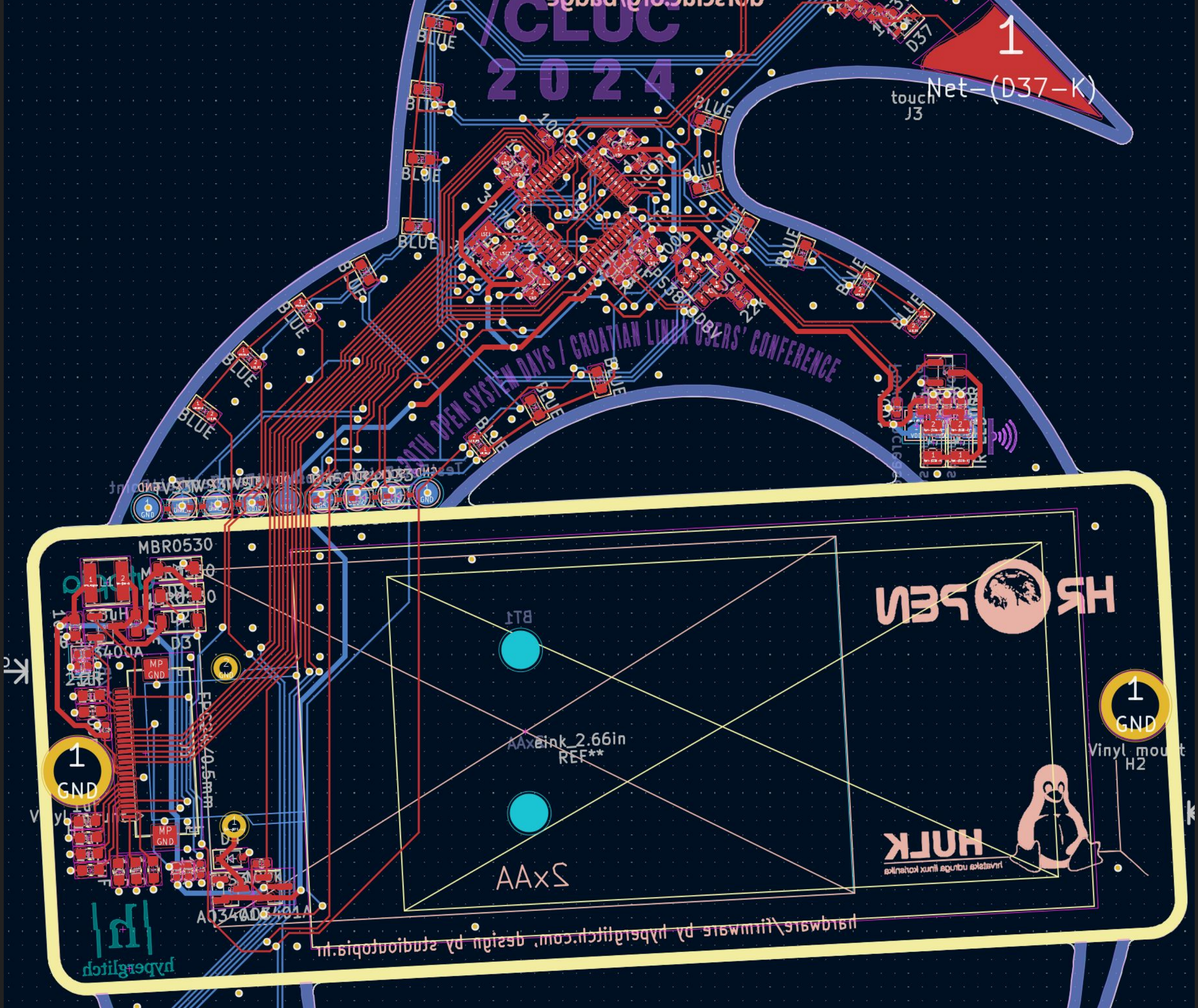
/CLUC
2024
BLUE
1
Net-(D37-K)
touch
J3
D37
20TH OPEN SYSTEM DAYS / CROATIAN LINUX USERS' CONFERENCE
22K
MBR0530
D3
MP GND
BT1
AAx eink_2.66in
REF**
2xAA
1
GND
Vinyl mount
H2
HR OPEN
HULK
hrvatska udruga linux korisnika
hardware/firmware by hyperglitch.com, design by studioutopia.hr
hyperglitch
AO3401A

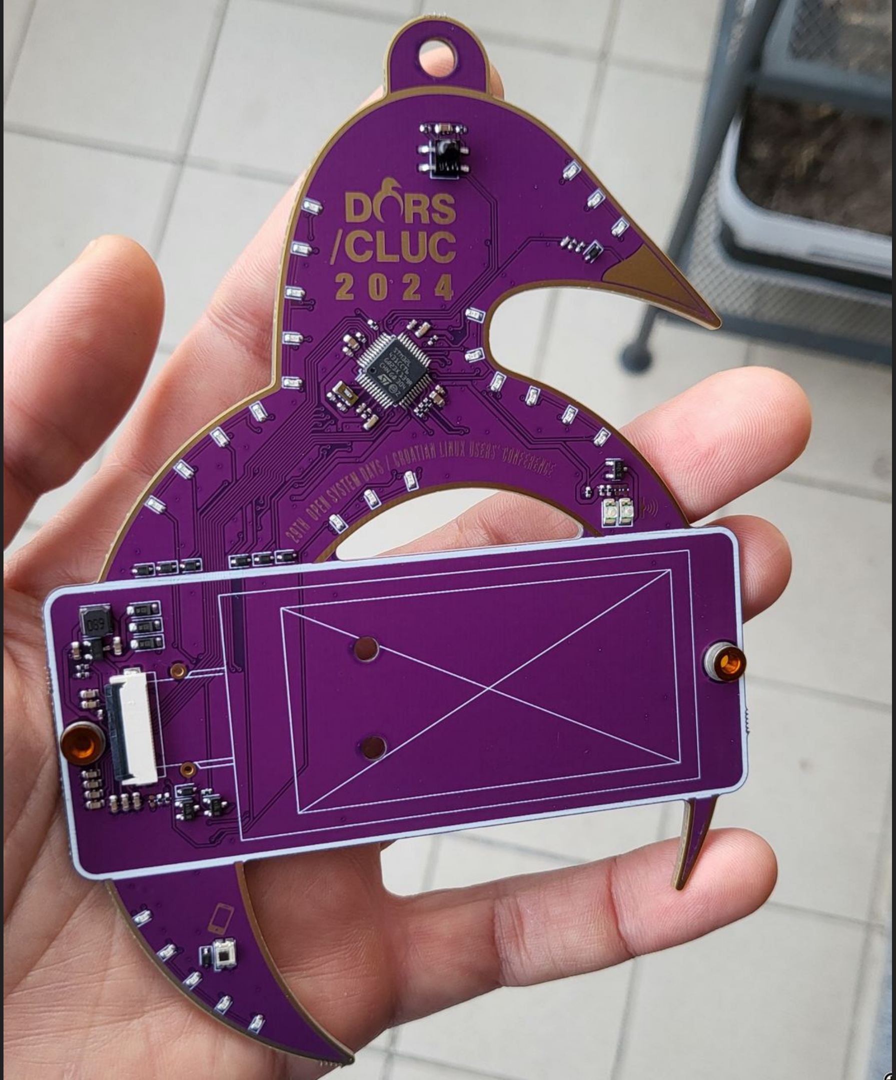
DORS
/CLUC
2024
29TH OPEN SYSTEM DAYS / CROATIAN LINUX USERS' CONFERENCE

DORS
/CLUC
2024

PRINT AREA
SATIN POWDER-COATED SHEET by Prusa3D.com
ORIGINAL PRUSA MINI+
100%
Printing time
Tune
Reprint
Home
23°C
23°C
0%
100%

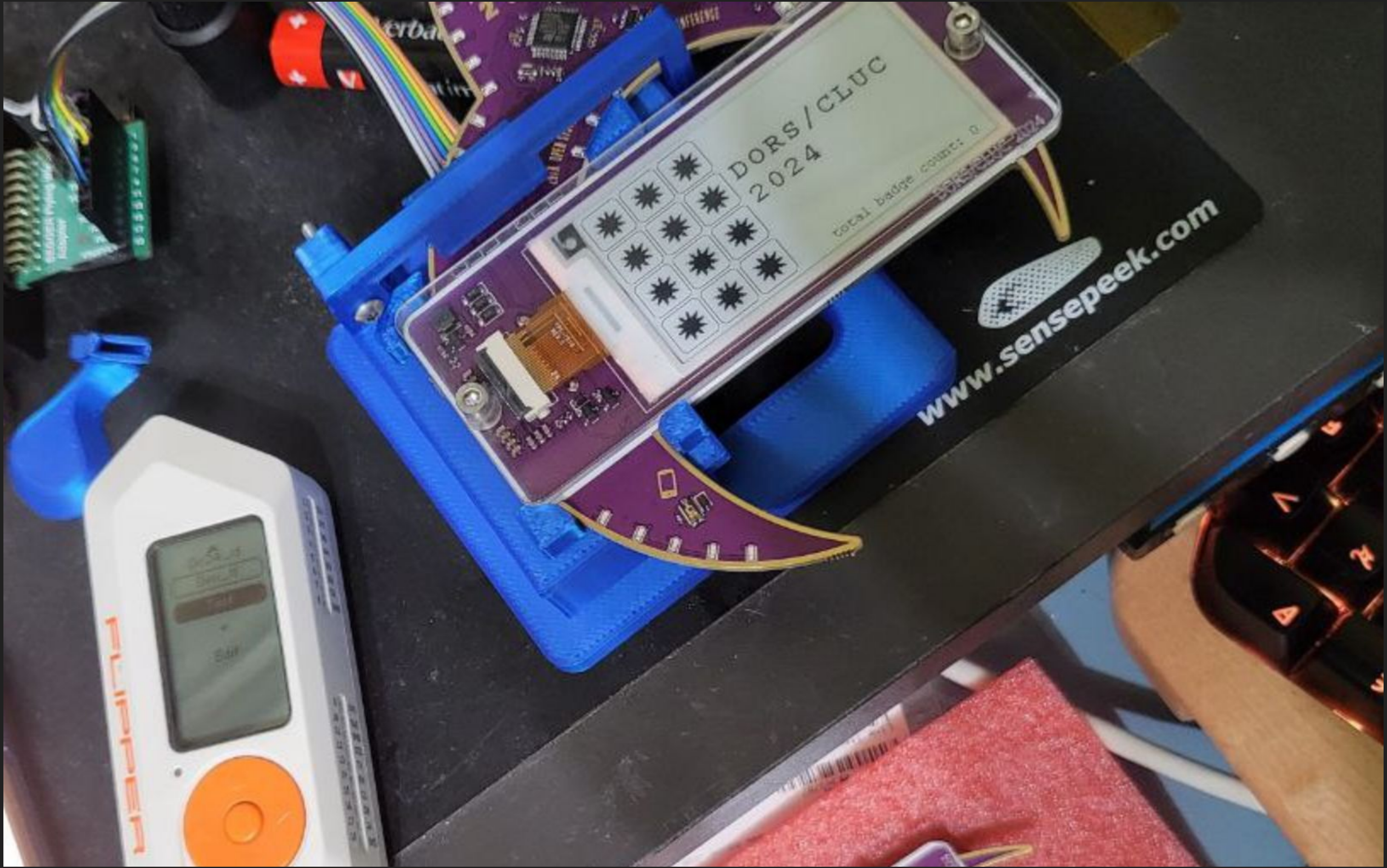
DORS/CLUC
2024
total badge count: 0
www.sensepeek.com
FLIPPER

/data transfer

- Clock recovery – switching is better than waiting
  - → Manchester encoding
    - 1 → 01
    - 0 → 10
    - Maximum two consecutive identical symbols

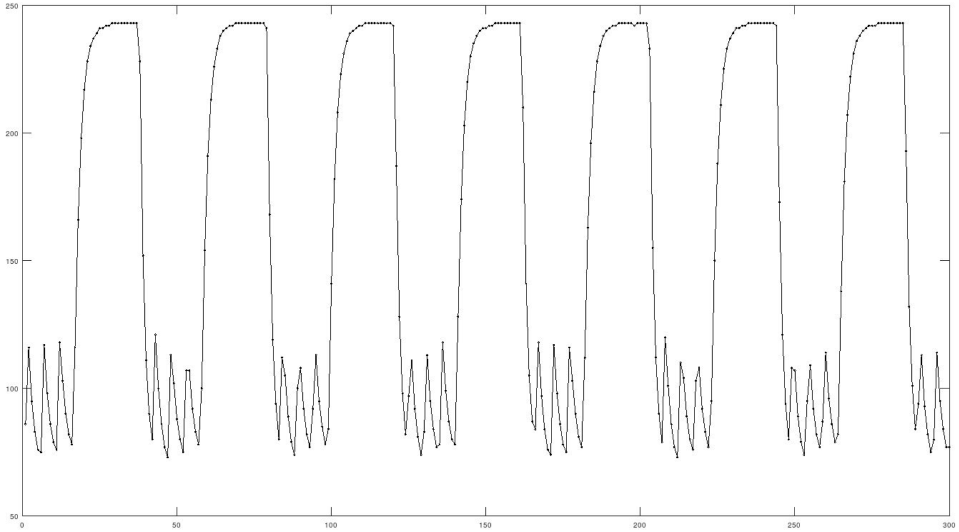
250
200
150
100
50
0
50
100
150
200
250
300

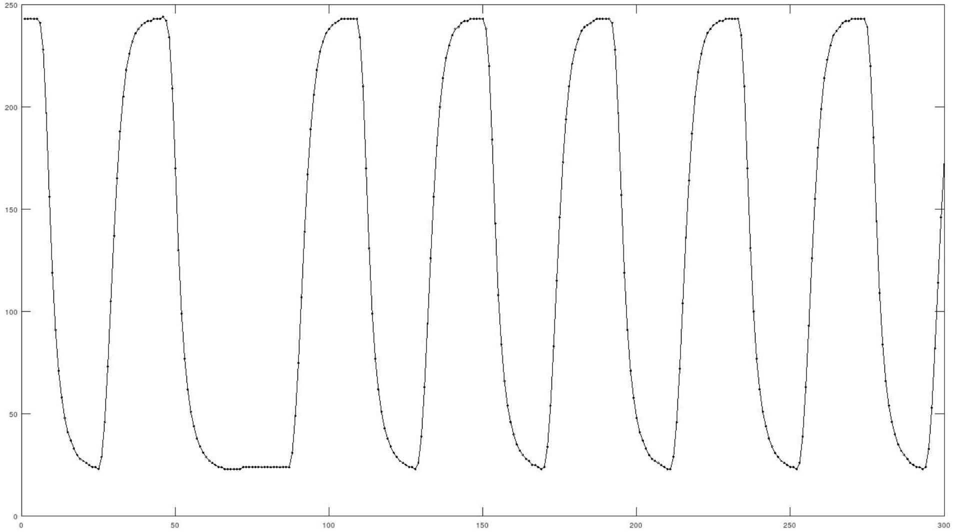
250
200
150
100
50
0
0
50
100
150
200
250
300

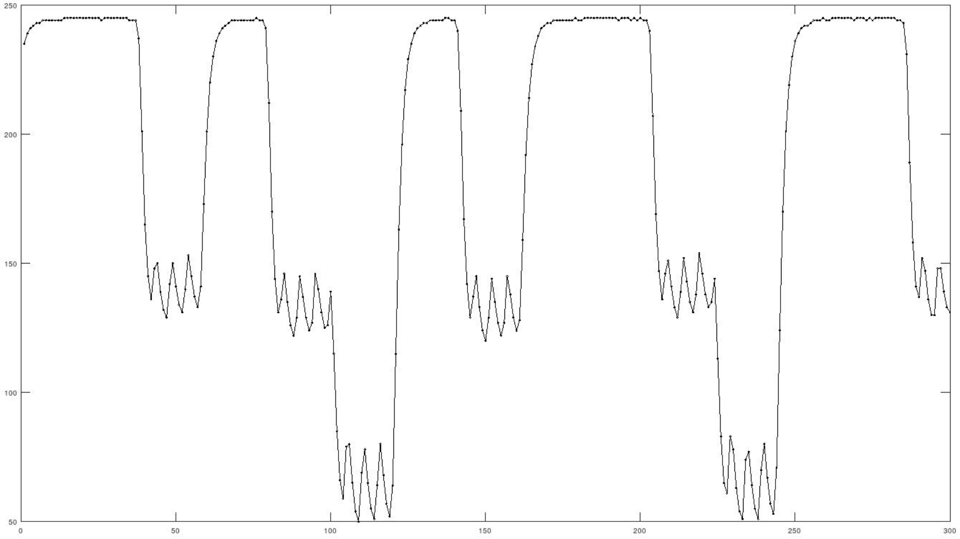
250
200
150
100
50
0
50
100
150
200
250
300

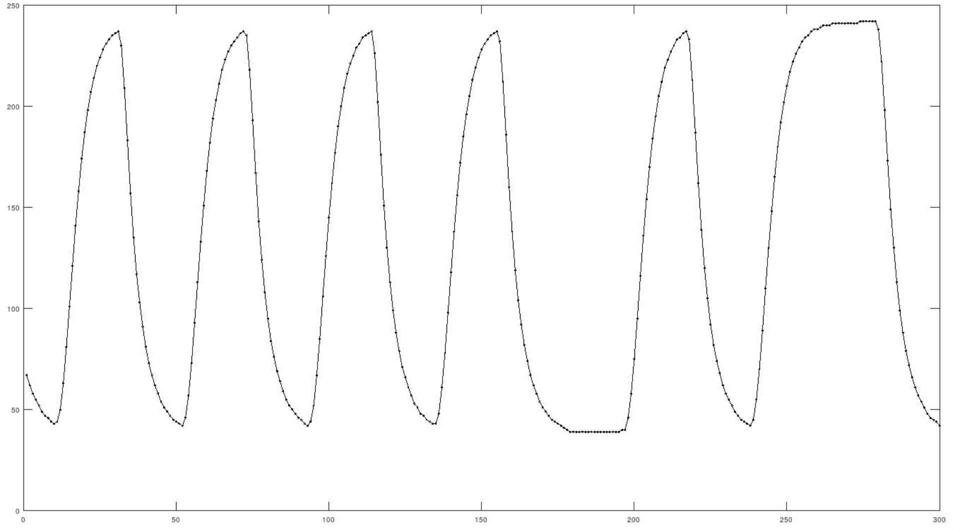
250
200
150
100
50
0
0
50
100
150
200
250
300

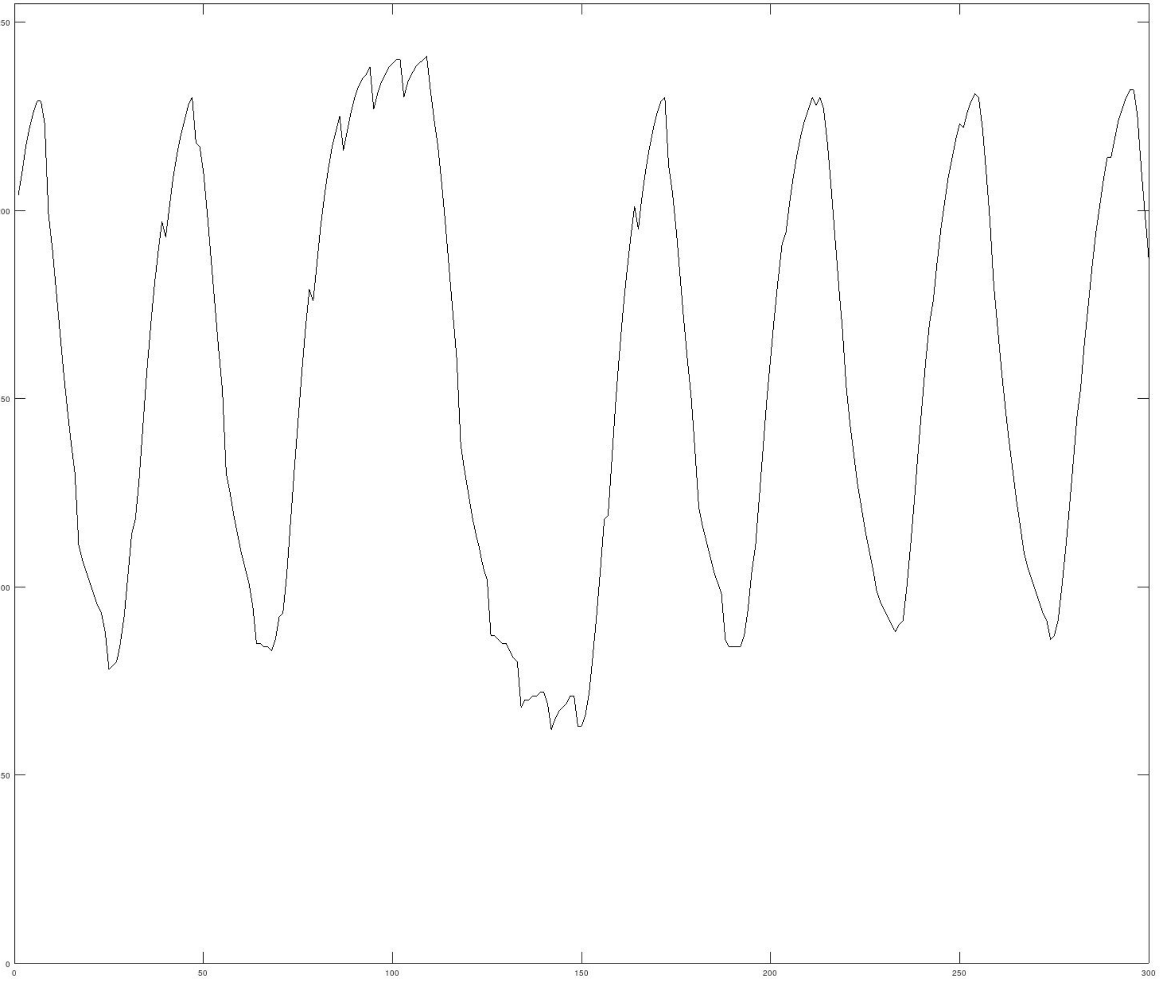
250
200
150
100
50
0
0
50
100
150
200
250
300

https://certification.oshwa.org/hr000116.html

OSHW
HR000116

https://gitlab.com/hyperglitch/dc2024badge/